M A W N E G

PART NO. 11-476

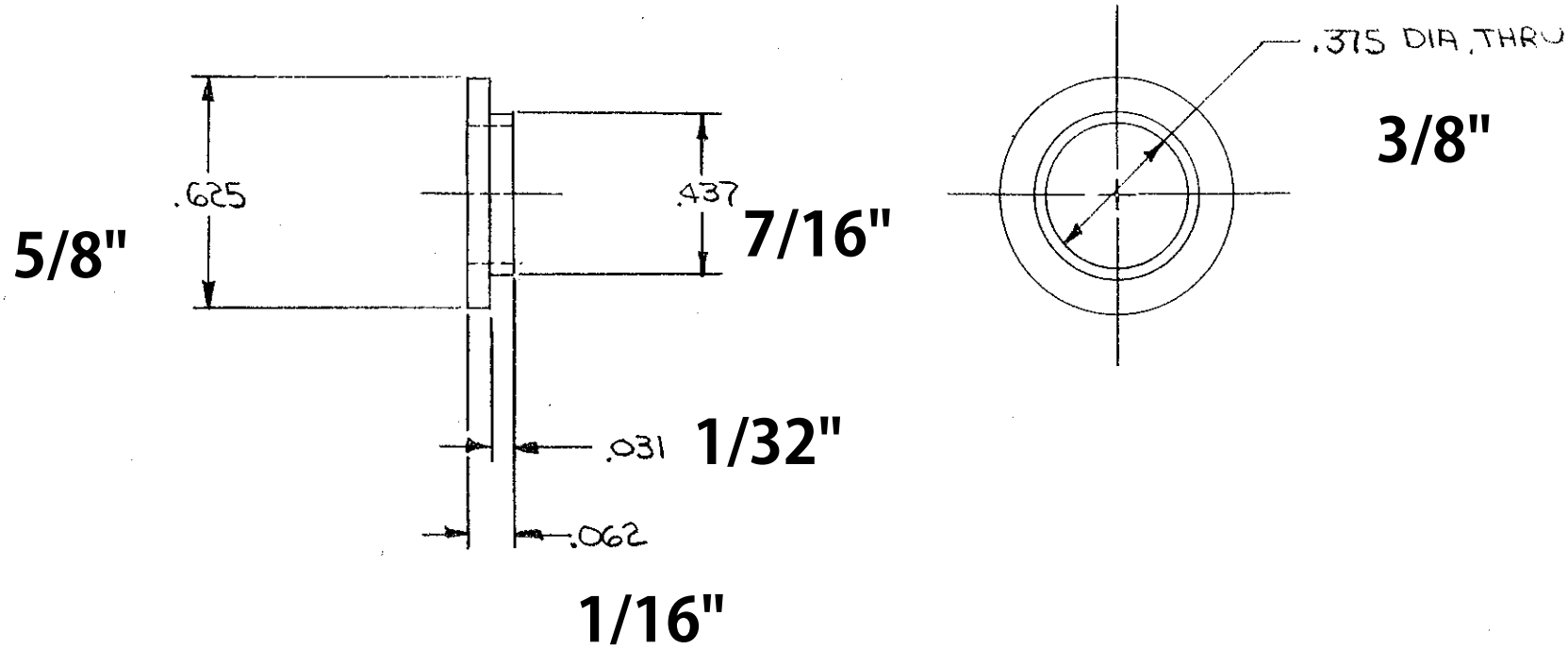

11-476

CH	NO.	CHANGE	DATE

DIMENSIONS ARE IN INCHES UNSPECIFIED TOLERANCES ARE: FRACTIONAL ± _____ DECIMALS ± .010 SCALE 2:1

G-C ELECTRONICS

DIVISION

NAME WASHER

MAT'L VULCANIZED FIBRE .062

DRAWN Foote 3-26-83

CHECKED

PART NO. 11-476