PART NO. 30 - 1812

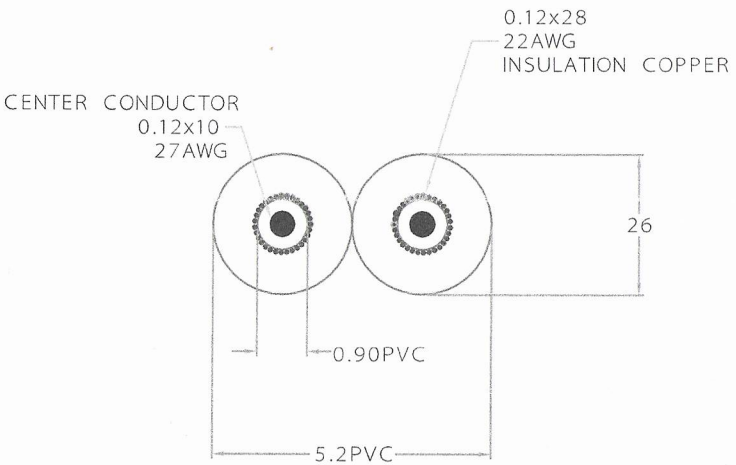

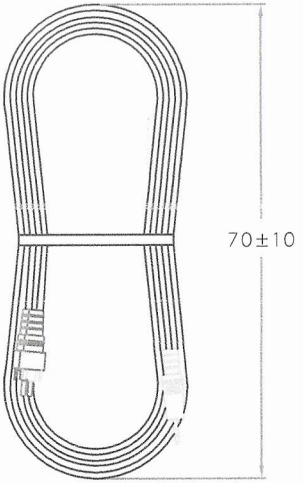

UPC: 010151212252
HTS: 8544429090
CoO: CN
RoHS: CERTIFIED

CABLE LENGTH: 6FT.

UNLESS OTHERWISE SPECIFIED, DIMENSIONS ARE FOR REFERENCE PURPOSES ONLY.

DRAWINGS ARE THE PROPERTY OF GC ELECTRONICS. REPRODUCTION OR DISTRIBUTION OF THIS DRAWING MUST HAVE PRIOR WRITTEN CONSENT FROM GC ELECTRONICS.

TOLERANCE				
		NO.	CHANGE	DATE

GC Electronics

PART NAME: DUAL RCA - 3.5mm STEREO MINI PHONE PLUG

MAT'L

DRAWN: S.R.S. 2/26/04

CHECKED

REV.

PART NO. 30 - 1812

SHEET 1 OF 1 SCALE NTS : DIMENSIONS mm