White Round Flush Jack

6P4C

PART NO. 30 - 9721

RoHS: CERTIFIED

UPC: 010151287441

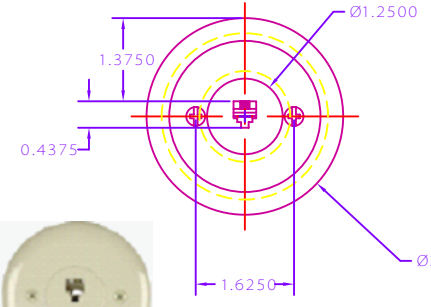

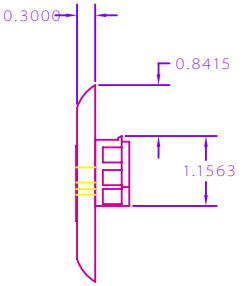

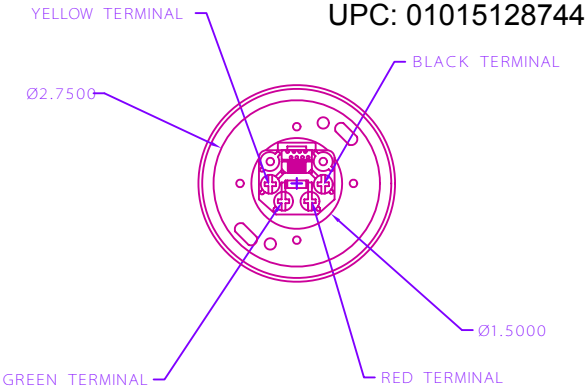

30-9702 for Ivory

SPECIFICATIONS

CONNECTOR: 6 POSITION / 4 CONDUCTOR
LEADWIRE: 26 AWG, 7 STRAND
LEADWIRE COLORS: BLACK, RED, GREEN, YELLOW
SPRING WIRE: .45mm (0.018 in) DIAMETER, PHOSPHOROUS BRONZE ALLOY
HOUSING MATERIAL: ABS AND POLYCARBONATE
1 RETAINING RING (METAL)
COLOR: IVORY
HARDWARE: (2) #8-32 MACHINE SCREWS

INSULATION RESISTANCE ≥500 MEGOHMS
DIELECTRIC STRENGTH: 500 V AC RMS, 60 Hz
CONTACT RESISTANCE ≤15 MILLIOHMS
CURRENT RATING: 1-1/2 AMPS
RETENTION FORCE: 76 N (17 lbs)
CRIMPING STRENGTH: 2.0 Kg (4.4 lbs)

30-9721-BU

UPC: 010151288202

CoO: China

HTS: 8536.69.8000

CH	NO.	CHANGE	DATE

SCALE 1 : 1 DIMENSIONS INCHES

GC Electronics

PART NAME TELEPHONE WALL PLATE

MAT'L MOLDED PLASTIC

DRAWN MICHAEL FOWLER 5/31/98

CHECKED

PART NO. 30 - 9721