PART NO. 30-9939

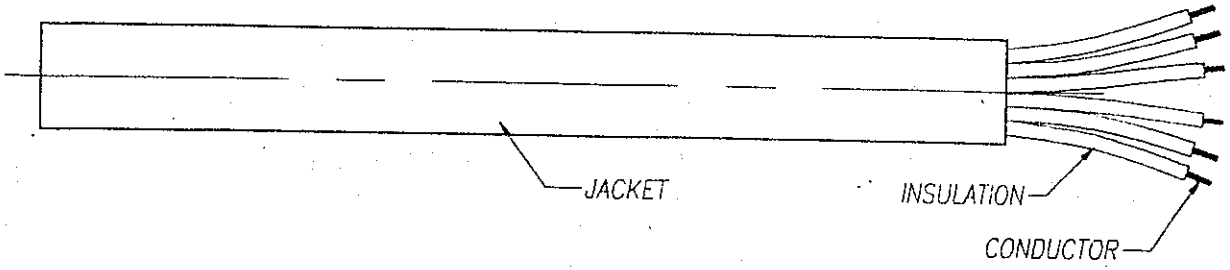

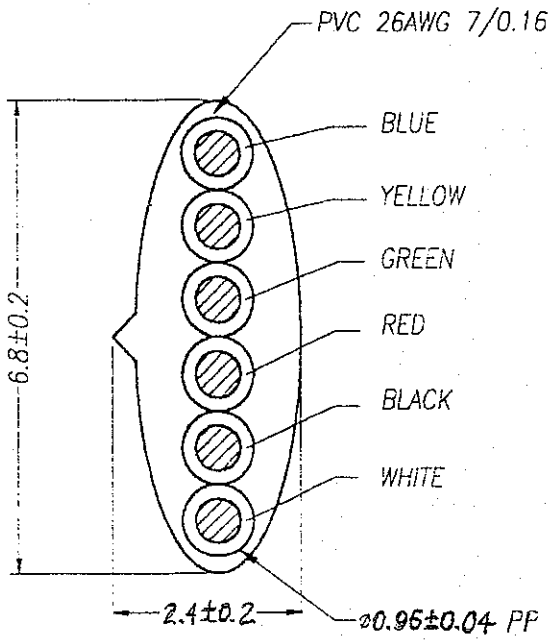

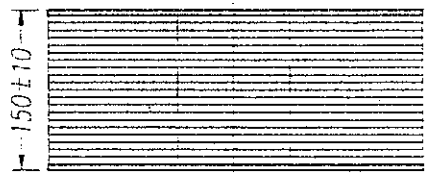

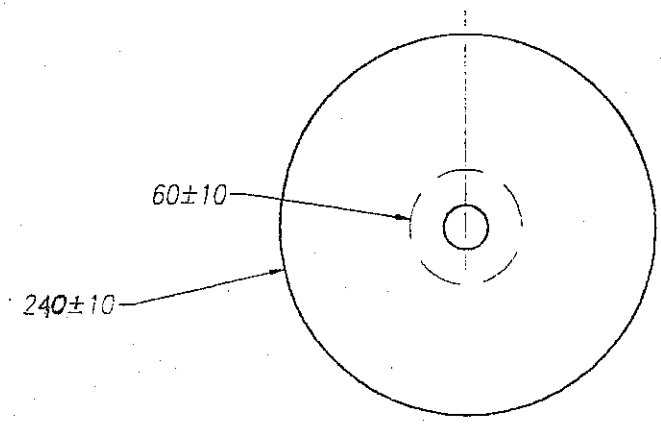

BIK Spool

UNLESS OTHERWISE SPECIFIED, DIMENSIONS ARE FOR REFERENCE PURPOSES ONLY.

DRAWINGS ARE THE PROPERTY OF GC ELECTRONICS. REPRODUCTION OR DISTRIBUTION OF THIS DRAWING MUST HAVE PRIOR WRITTEN CONSENT FROM GC ELECTRONICS.

TOLERANCE				
		NO.	CHANGE	DATE

GC Electronics

PART NAME 26/6 FLAT LINE CORD 1,000 FT, SILVER

MAT'L

DRAWN S.R.S. 4/15/05

CHECKED

REV.

PART NO. 30-9939

SHEET 1 OF 1 SCALE NTS: DIMENSIONS MM