M A W N E G

PART NO. 32-3100

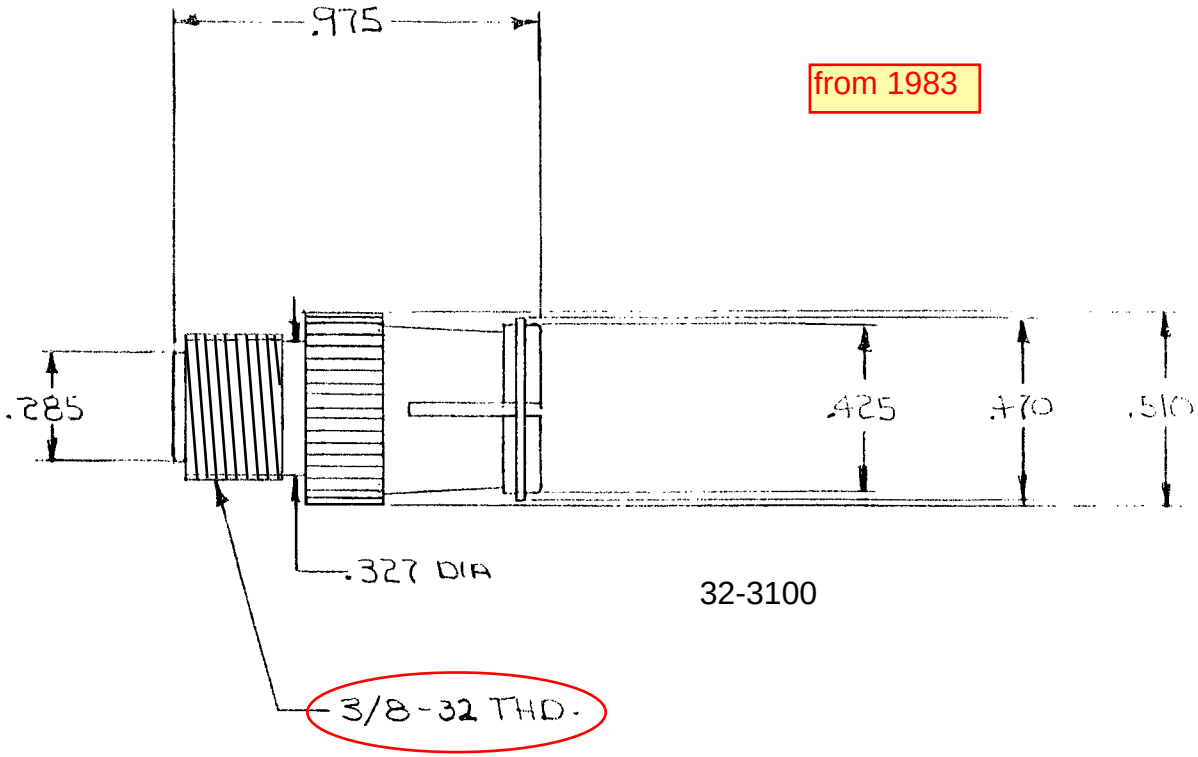

from 1983

32-3100

UPC: 010151326881
F FEMALE TO PUSH-ON F MALE
HTS: 8536.69.4050
CoO: China
RoHS: CERTIFIED

CH	NO.	CHANGE	DATE

DIMENSIONS ARE IN INCHES UNSPECIFIED TOLERANCES ARE: FRACTIONAL ± _____ DECIMALS ± _____ SCALE 2:1

G-C ELECTRONICS

NAME CONNECTOR

MAT'L

DRAWN FOOTE 5-26-83

CHECKED DRC

PART NO. 32-3100