PART NO. 33-1160

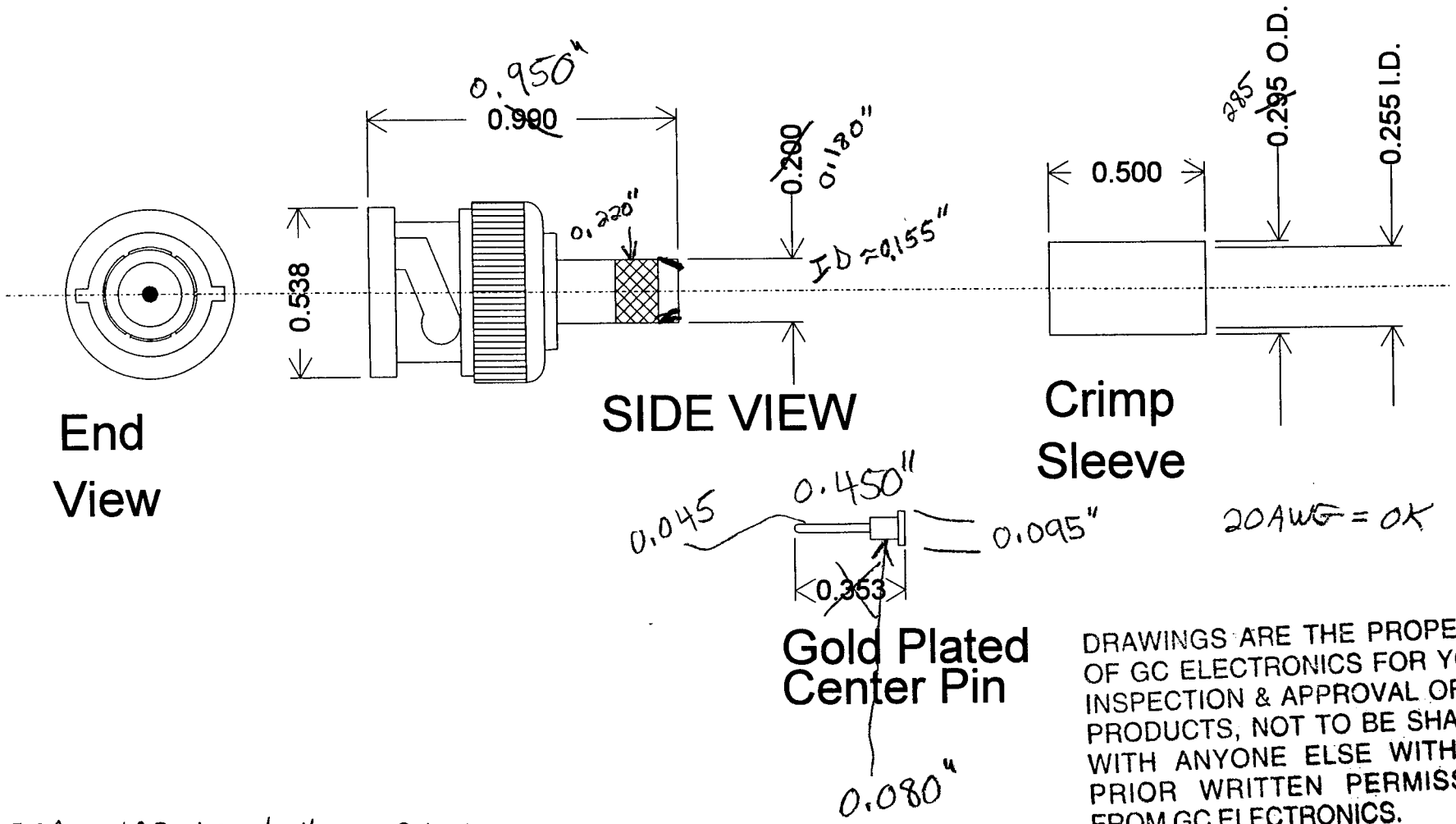

20AWG = OK

DRAWINGS ARE THE PROPERTY OF GC ELECTRONICS FOR YOUR INSPECTION & APPROVAL OF GC PRODUCTS, NOT TO BE SHARED WITH ANYONE ELSE WITHOUT PRIOR WRITTEN PERMISSION FROM GC ELECTRONICS.

can use Tool #12-9004

CH	NO.	CHANGE	DATE

FINISH

GC ELECTRONICS

NAME Male "BNC" 3 pc Crimp-on Connector

MAT'L for RG-59 & 62 Coax cable

DRAWN Chuck S. 12-31-93 PART NO. 33-1160

CHECKED

DIMENSIONS ARE IN INCHES UNSPECIFIED TOLERANCE FRACTIONAL : 1/64" DECIMAL : .005" SCALE : 2:1

GC-OOFR-5081