PART NO. 33-1163

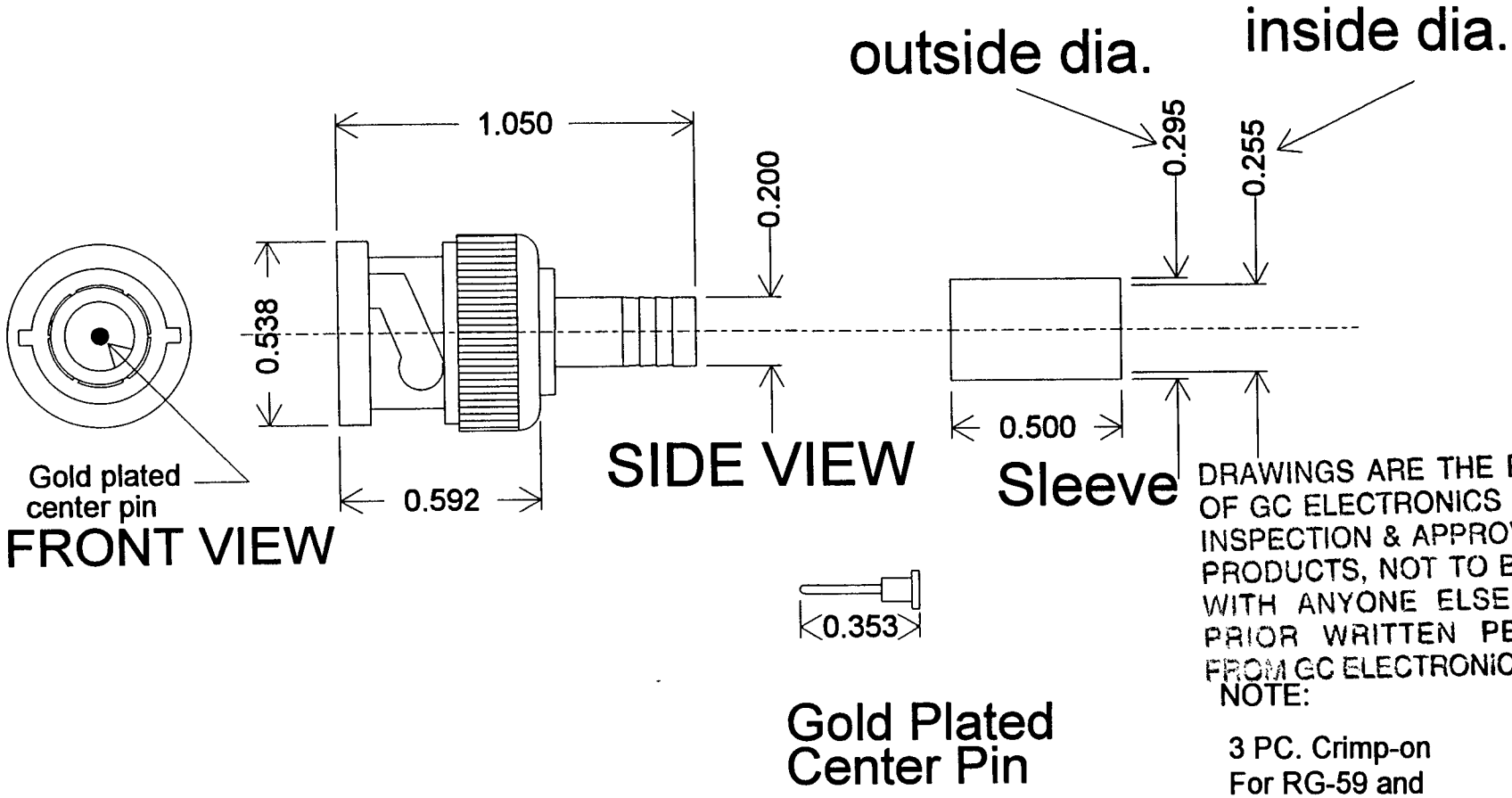

DRAWINGS ARE THE PROPERTY OF GC ELECTRONICS FOR YOUR INSPECTION & APPROVAL OF GC PRODUCTS, NOT TO BE SHARED WITH ANYONE ELSE WITHOUT PRIOR WRITTEN PERMISSION FROM GC ELECTRONICS.

NOTE:

3 PC. Crimp-on
For RG-59 and
RG-62 Teflon

CH	NO.	CHANGE	DATE

FINISH

GC ELECTRONICS

NAME Male "BNC" 3 pc Crimp-on Connector

MAT'L for RG-59 & 62 Teflon Coax cable

DRAWN Chuck S. 6-1-93

CHECKED

PART NO. 33-1163

DIMENSIONS ARE IN INCHES UNSPECIFIED TOLERANCE FRACTIONAL : 1/64" DECIMAL : .005" SCALE : 2:1

GC-OOFR-5081