PART NO. 33-1500

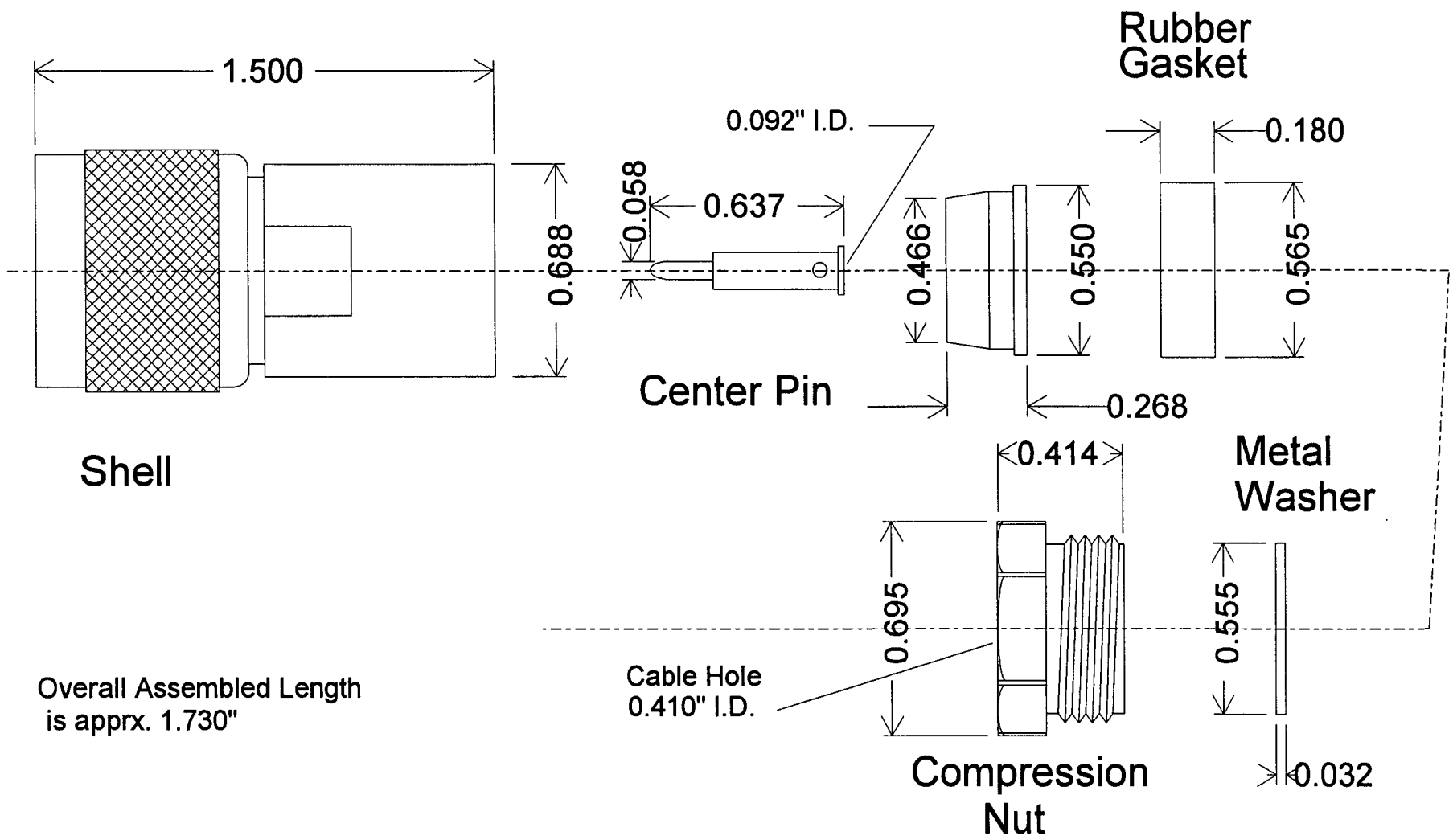

Overall Assembled Length
is apprx. 1.730"

FINISH

CH	NO.	CHANGE	DATE

NAME Male 6 pc "N" Compression Connector

MAT'L for RG-8, 213 & 214 Coax cable

DRAWN Chuck S. 03-06-94

CHECKED

PART NO. 33-1500

DIMENSIONS ARE IN INCHES UNSPECIFIED TOLERANCE FRACTIONAL : 1/64" DECIMAL : .005" SCALE : 2:1

GC-OOFR-5081