PART NO. 33-1510

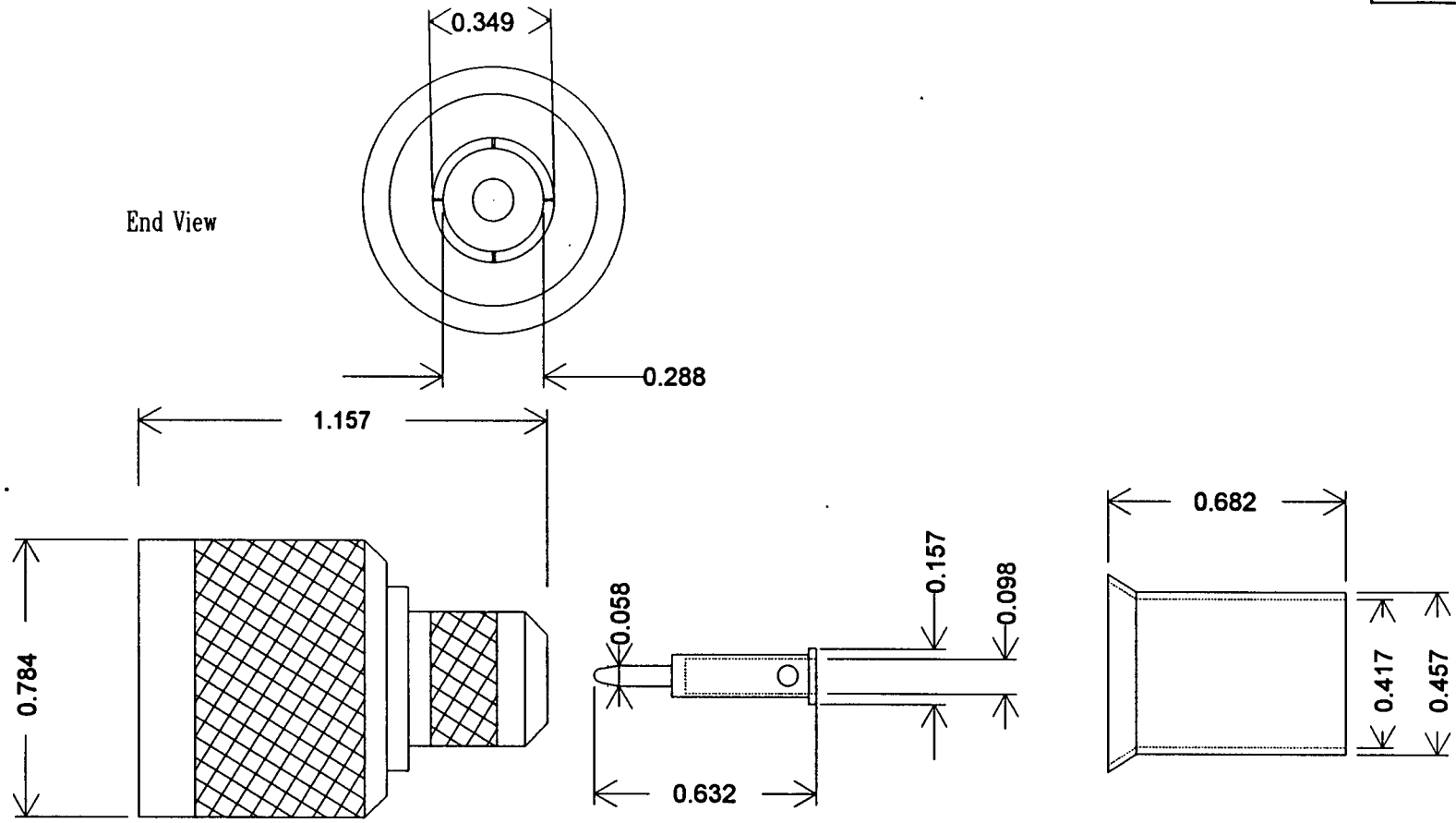

CH	NO.	CHANGE	DATE

FINISH

GC ELECTRONICS

NAME "N" 3pc Male Crimp-on, RG-8, 11, 213, & 214

MAT'L

DRAWN Chuck S. 9-30-93

CHECKED

PART NO. 33-1510

DIMENSIONS ARE IN INCHES

UNSPECIFIED TOLERANCE FRACTIONAL : 1/64 DECIMAL: .005

SCALE : N/A

GC-OOFR-6081