PART NO. 33- 278 RED
33- 280 BLACK

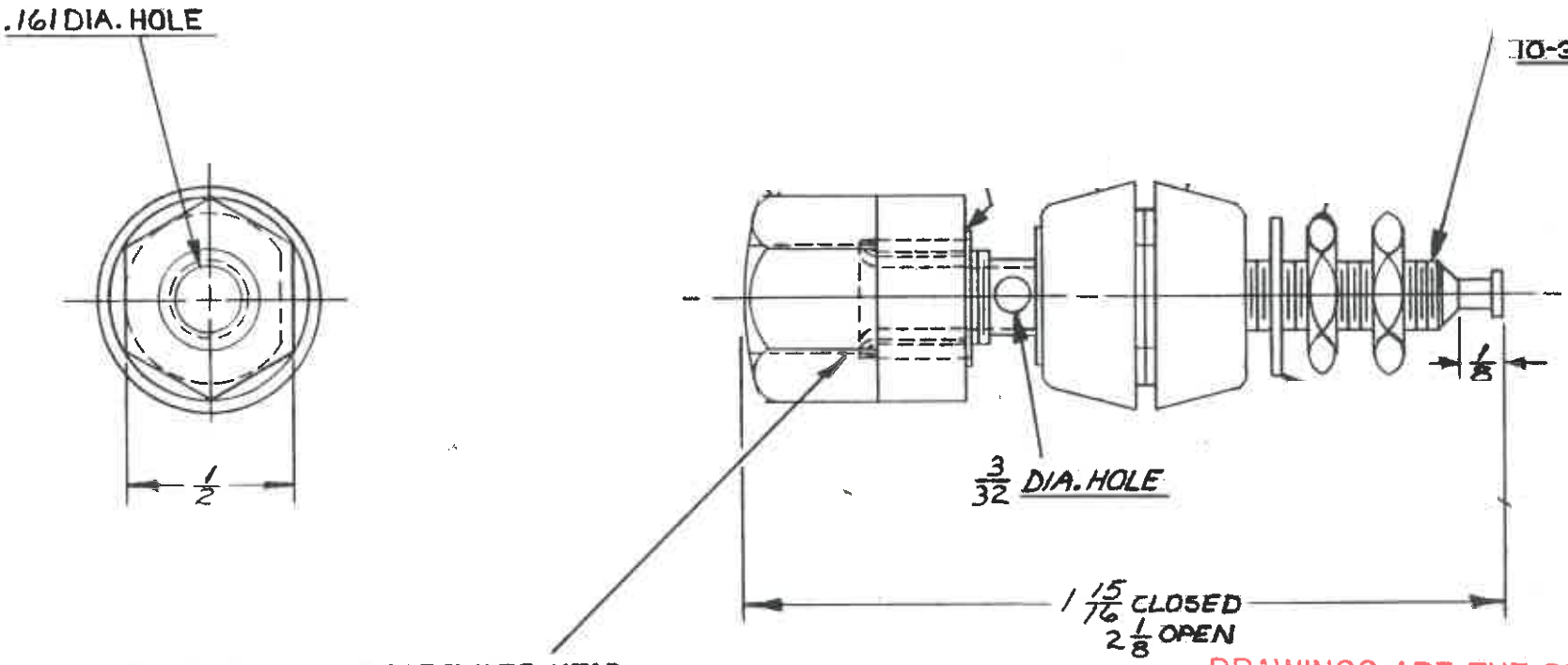

old 1968

DRAWINGS ARE THE PROPERTY OF GC ELECTRONICS FOR YOUR INSPECTION & APPROVAL OF GC PRODUCTS, NOT TO BE SHARED WITH ANYONE ELSE WITHOUT PRIOR WRITTEN PERMISSION FROM GC ELECTRONICS.

FINISH

CH	NO.	CHANGE	DATE

DIMENSIONS ARE IN INCHES UNSPECIFIED TOLERANCES ARE: FRACTIONAL ± 1/64 DECIMALS ± .005 SCALE ~

G-C ELECTRONICS

DIVISION

NAME BINDING POST (HEAVY DUTY)

MAT'L

DRAWN GRAY 12-18-68

CHECKED

PART NO. 33- 278 RED
33- 280 BLACK