PART NO. 33-540

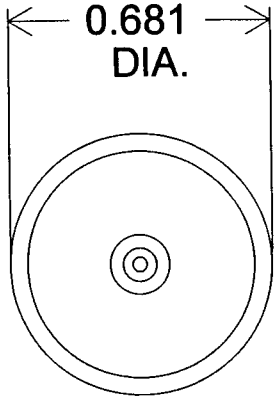

End view

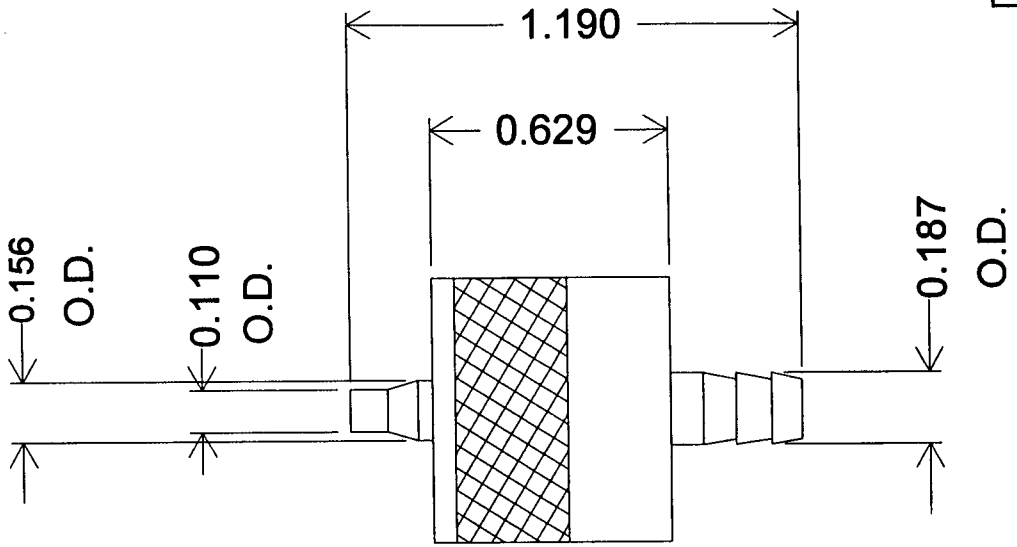

Side View

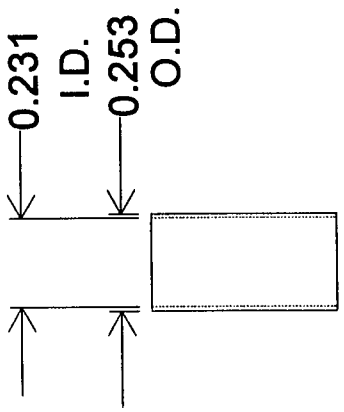

Crimp sleeve

DRAWINGS ARE THE PROPERTY OF GC ELECTRONICS FOR YOUR INSPECTION & APPROVAL OF GC PRODUCTS, NOT TO BE SHARED WITH ANYONE ELSE WITHOUT PRIOR WRITTEN PERMISSION FROM GC ELECTRONICS.

CH	NO.	CHANGE	DATE

FINISH

GC ELECTRONICS

NAME Male Crimp-on "UHF" Connector

MAT'L for RG-58 Coax cable

DRAWN Chuck S. 03-02-94

CHECKED

PART NO. 33-540

DIMENSIONS ARE IN INCHES UNSPECIFIED TOLERANCE FRACTIONAL: 1/64" DECIMAL: .005" SCALE: 2:1

GC-OOFR-5081