NYLON

ACCESSORIES

CAP PLUNGER

35-436
35-437
35-438

35-438

Black (10 Pack)

35-437

Red (10 Pack)

35-436

1-each Red & Black

Note: for use on switches: 35-430, 35-432, and 35-449

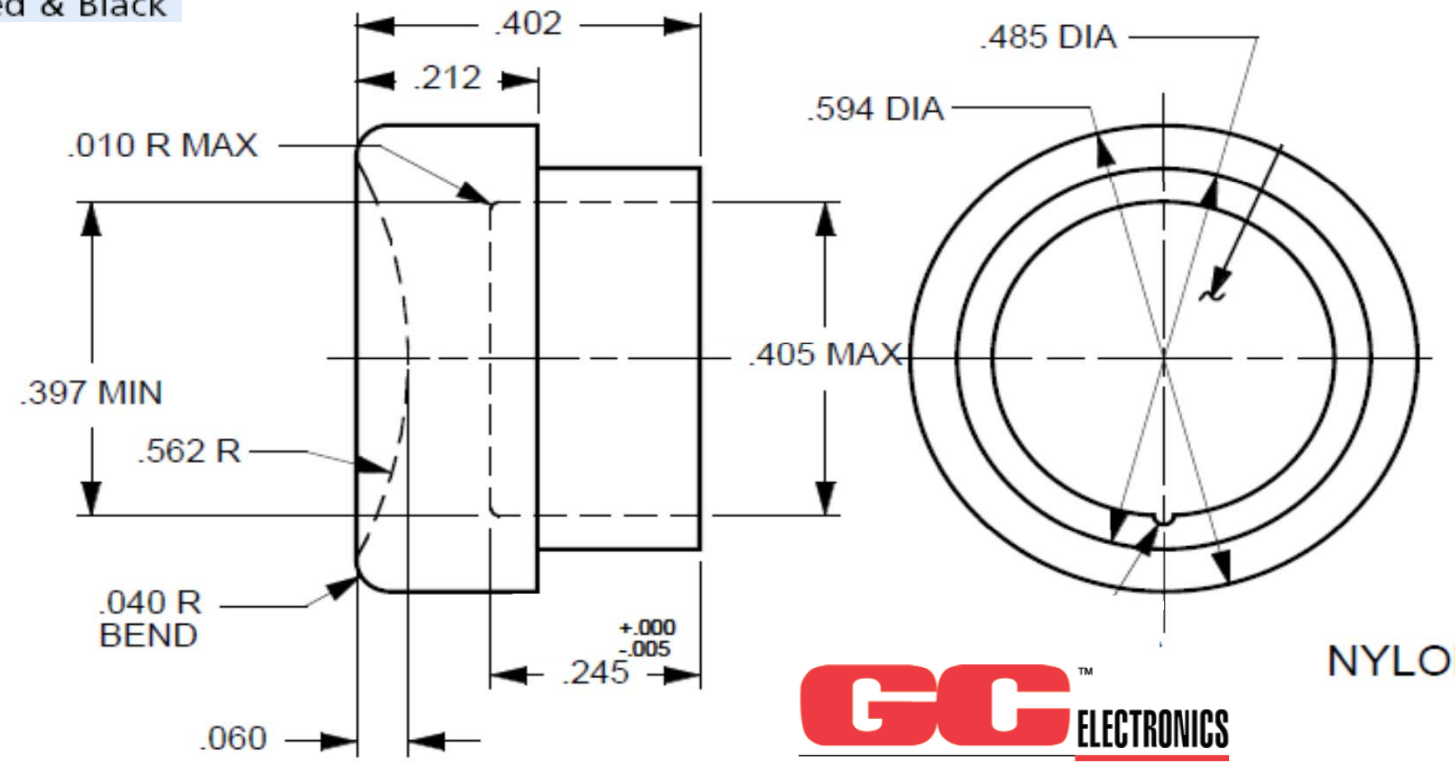

NYLON

GC ELECTRONICS™