PART NO. 35 - 621

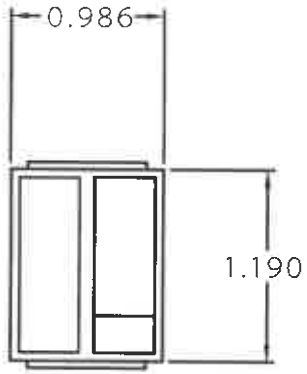

LAMP NYLON PLASTIC

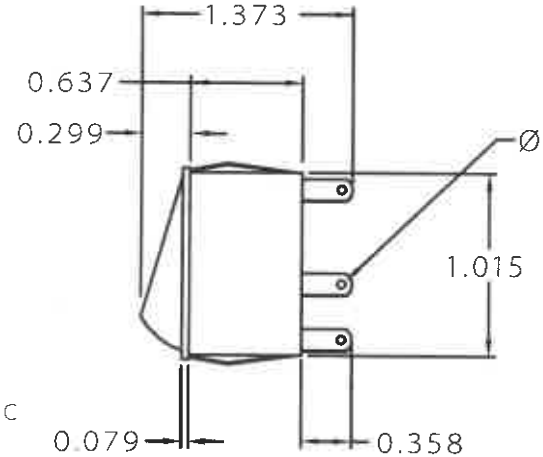

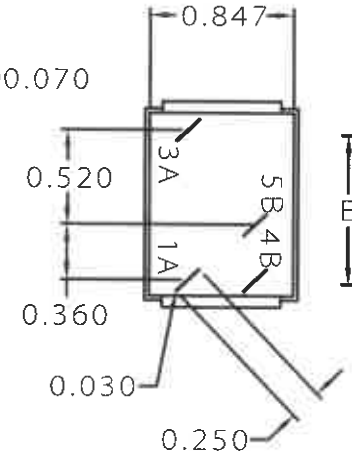

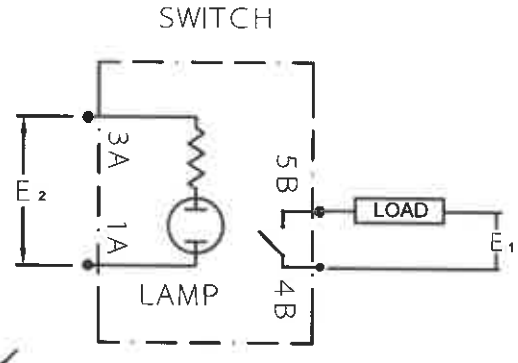

PANEL CUTOUT

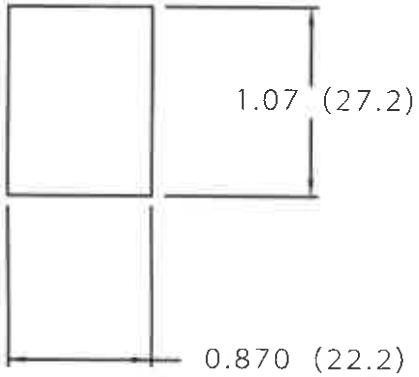

PANEL THICKNESS: 0.029 to 0.1299

SPECIFICATIONS

UL 85°C, FILE: E45221, CSA FILE: LR10990

POLES / THROWS:	SPST
CURRENT RATING:	16A, 1 HP - 250Vac, T125, NON IND.; 16A, 1/2 HP - 125Vac
INITIAL CONTACT RESISTANCE:	10 MILLI-OHMS MAX.
INSULATION RESISTANCE:	20 MEGA-OHMS MIN.
DIELECTRIC STRENGTH:	1,000Vac MIN.
CONTACT MATERIAL:	FINE SILVER
TERMINAL MATERIAL:	BRASS - SILVER PLATED
TERMINAL TYPE:	COMBINATION SOLDER & .250 QUICK CONNECT
LAMP:	2A LAMP 125Vac
LAMP COLOR:	RED

UNLESS OTHERWISE SPECIFIED, DIMENSIONS ARE FOR REFERENCE PURPOSES ONLY.

TOLERANCE ±0.005

DRAWINGS ARE THE PROPERTY OF GC ELECTRONICS. REPRODUCTION OR DISTRIBUTION OF THIS DRAWING MUST HAVE PRIOR WRITTEN CONSENT FROM GC ELECTRONICS.

NO.	CHANGE	DATE

GC Electronics

PART NAME ROCKER SW, SPST, ON/OFF, LIGHTED RED LENS

MAT'L

DRAWN S.R.S. 8/16/04

CHECKED REV.

PART NO. 35 - 621

SHEET 1 OF 1 SCALE NTS DIMENSIONS INCHES