Snap Action Switch SPDT 15A Roller Lever 15A @ 125/250 Vac

P/N: 35-874

2026

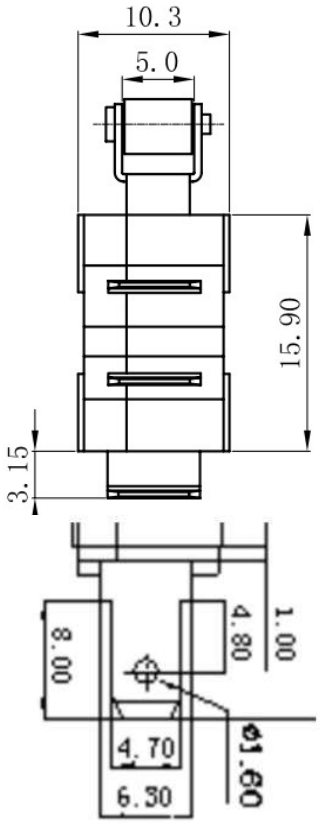

.187" quick connect

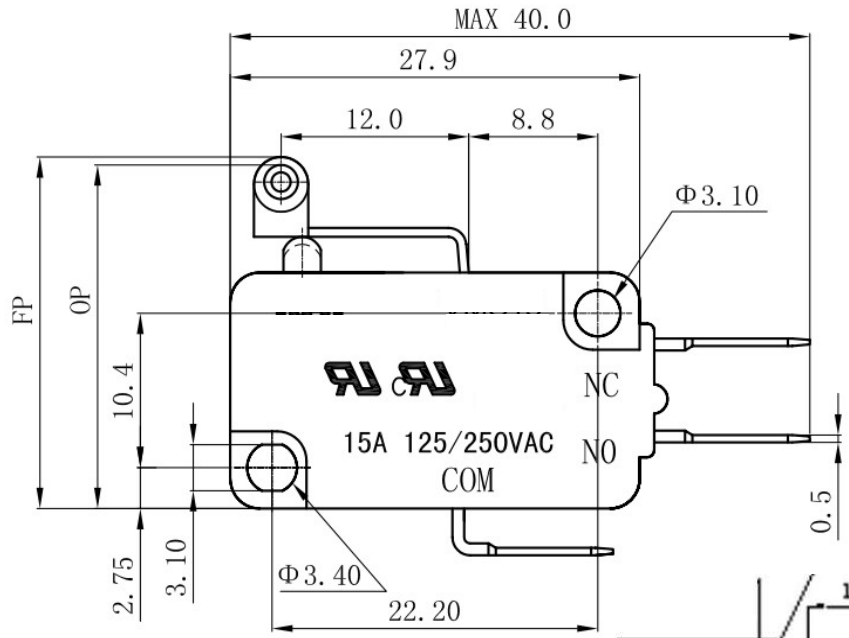

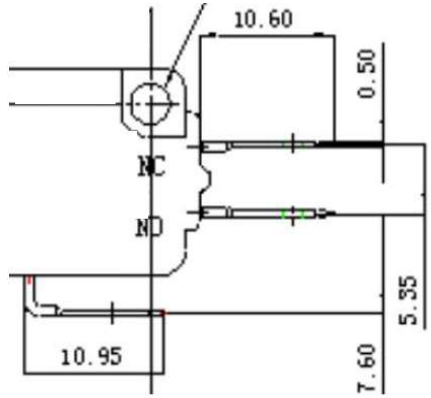

RoHS

O.F.: 160 +/- 40 g

O.P.: 23.45 +/- 1 mm

F. P.: 24.45 +/- 1 mm

UPC: 010151547422
HTS: 8536509065
CoO: China

Operating Temp.: (-25 to 85)℃
Mechanical life ： 100,000 cycles
Electrical life ： 10,000 cycles

Contact Resistance:＜100mΩ
Insulation Resistance:＞100MΩ 500Vdc
Withstand Voltage:1,500Vac 1 minute

GC Electronics | www.gcelectronics.com | PH: (833) 423-0432 | 3100 N.W. 36th Street, Miami, Florida 33142