PART NO. **41-1001**

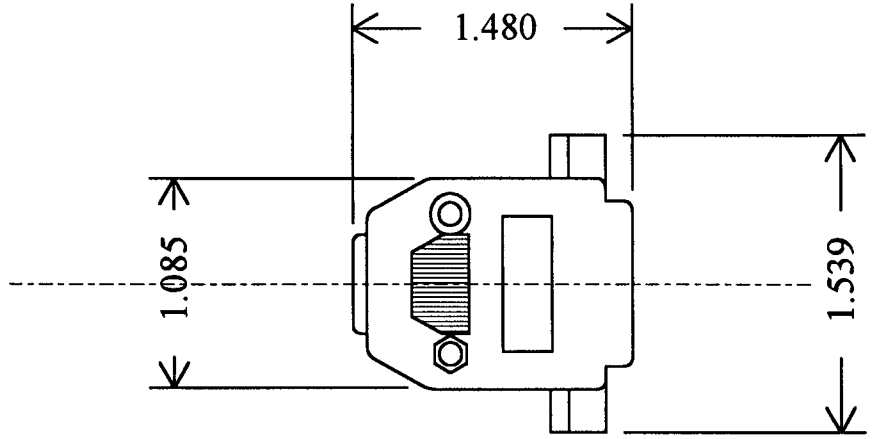

Hardware Included:

- 1 cable clamp with 2 screws
- 2 screws with nuts to hold hood together
- 2 screw lock assembles

DRAWINGS ARE THE PROPERTY OF GC ELECTRONICS FOR YOUR INSPECTION & APPROVAL OF GC PRODUCTS, NOT TO BE SHARED WITH ANYONE ELSE WITHOUT PRIOR WRITTEN PERMISSION FROM GC ELECTRONICS.

UPC: 010151454034
HTS USA: 8536698000
RoHS: CERTIFIED
CoO: TW

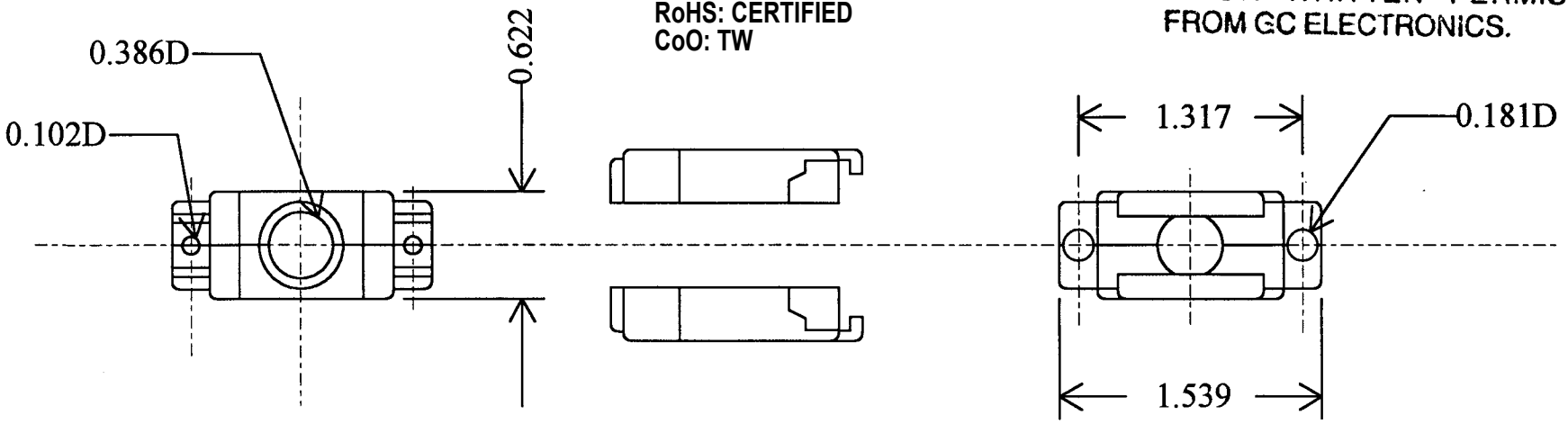

FINISH: Gray

CH	NO.	CHANGE	DATE

GC ELECTRONICS

NAME: Subminiature "D" Hood Kit (DB-15)

MAT'L: Plastic

DRAWN: C.W. Stauber 27-Nov-95

CHECKED:

PART NO. **41-1001**

DIMENSIONS ARE IN INCHES AND FOR REFFERENCE ONLY UNSPECIFIED TOLERANCE FRACTIONAL: ±1/64" DECIMAL: ±.005" SCALE: N/A

GC-OOFR-5081