PART NO. 41-2211

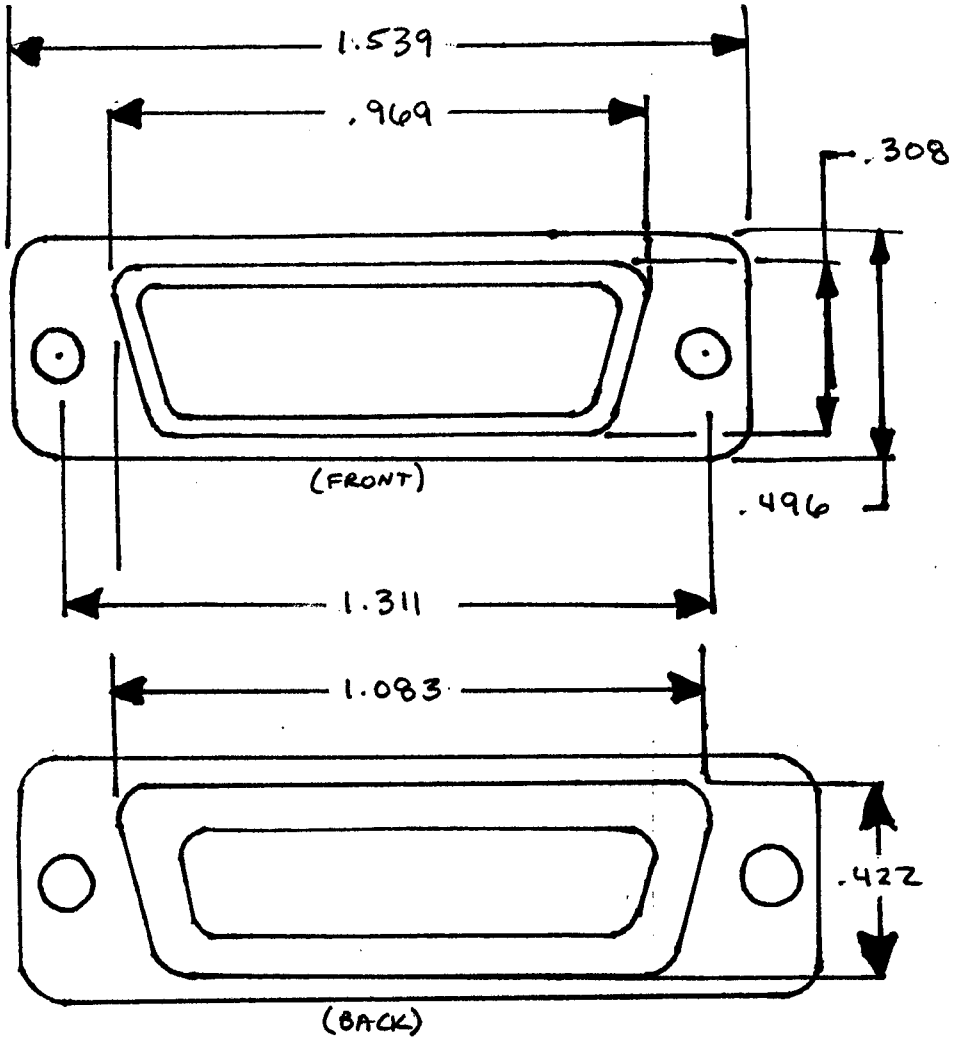

Specifications

Contact Rating	: 5 Amperes
Wire Size	: 20 AWG Max.
Contact Resistance	: 10 Milliohms Max.
Temperature Range	: -55 C to +105 C
Insulation Resistance	: 5000 Megaohms Min.
Dielectric Withstanding Voltage	: 1250V AC at Sea Level
Insulator Material	: Two-piece Nylon UL Rated 94V-
Shell Material	: Zinc Plated
Contact Pin Material	: Brass
Contact Pin and Socket Finish	: Gold over Nickel Plate

DB-15 Solder

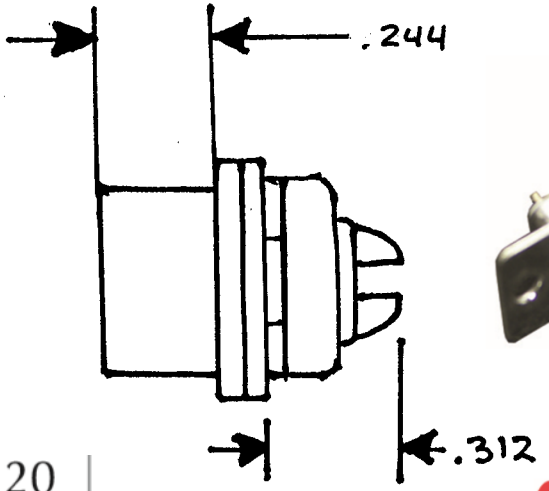

UPC: 010151458988

HTS: 8536698000
CoO: TW

5 Amps | 20 AWG

GC ELECTRONICS

CH	NO.	CHANGE	DATE

FINISH

GC ELECTRONICS

NAME D-Sub Connector, Female, Solder

DB-15

DRAWN Don D. 11/25/91

CHECKED

PART NO. 41-2211

SCALE N/A DIMENSIONS IN

GC-OOFR-5081