PART NO. 41-2411

RoHS: UNKNOWN

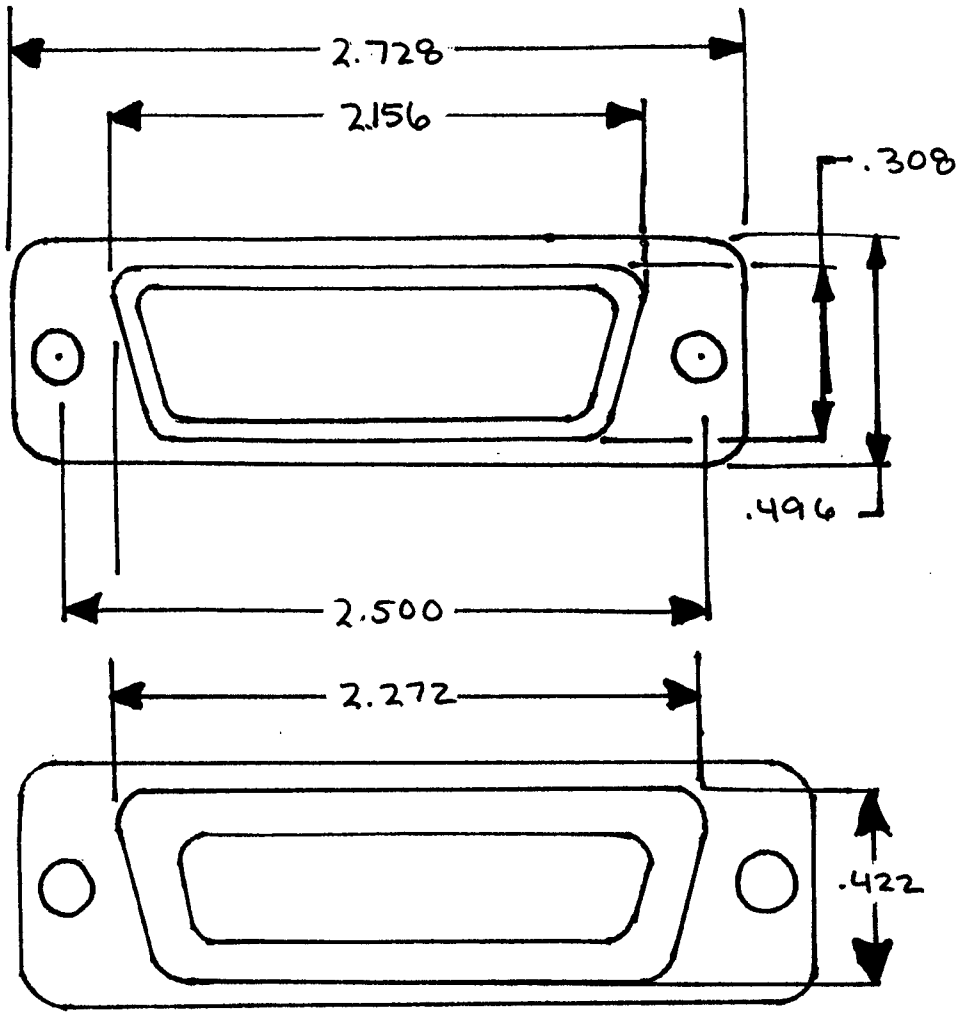

Specifications

Contact Rating	: .5 Amperes
Wire Size	: #20 AWG Max.
Contact Resistance	: 10 Milliohms Max.
Temperature Range	: -55 C to +105 C
Insulation Resistance	: 5000 Megaohms Min.
Dielectric Withstanding Voltage	: 1250V AC at Sea Level
Insulator Material	: Two-piece Nylon UL Rated 94V-
Shell Material	: Zinc Plated
Contact Pin Material	: Brass
Contact Pin and Socket Finish	: Gold over Nickel Plate

DB-37 Solder

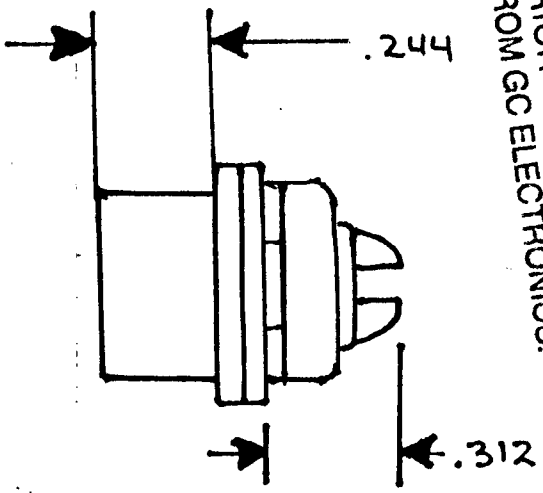

DRAWINGS ARE THE PROPERTY OF GC ELECTRONICS FOR YOUR INSPECTION & APPROVAL OF GC PRODUCTS, NOT TO BE SHARED WITH ANYONE ELSE WITHOUT PRIOR WRITTEN PERMISSION FROM GC ELECTRONICS.

41-2411-BU
UPC: 010151458445

UPC: 010151458452
HTS USA: 8536698000
CoO: TW

										CH	NO.	CHANGE	DATE		

SCALE N/A DIMENSIONS IN

FINISH

GC ELECTRONICS 1 GC ELECTRONICS 2

NAME D-Sub Connector, Female, Solder

[redacted] DB-37

DRAWN Don D. 11/25/91

CHECKED

PART NO. 41-2411

GC 00FR 5001